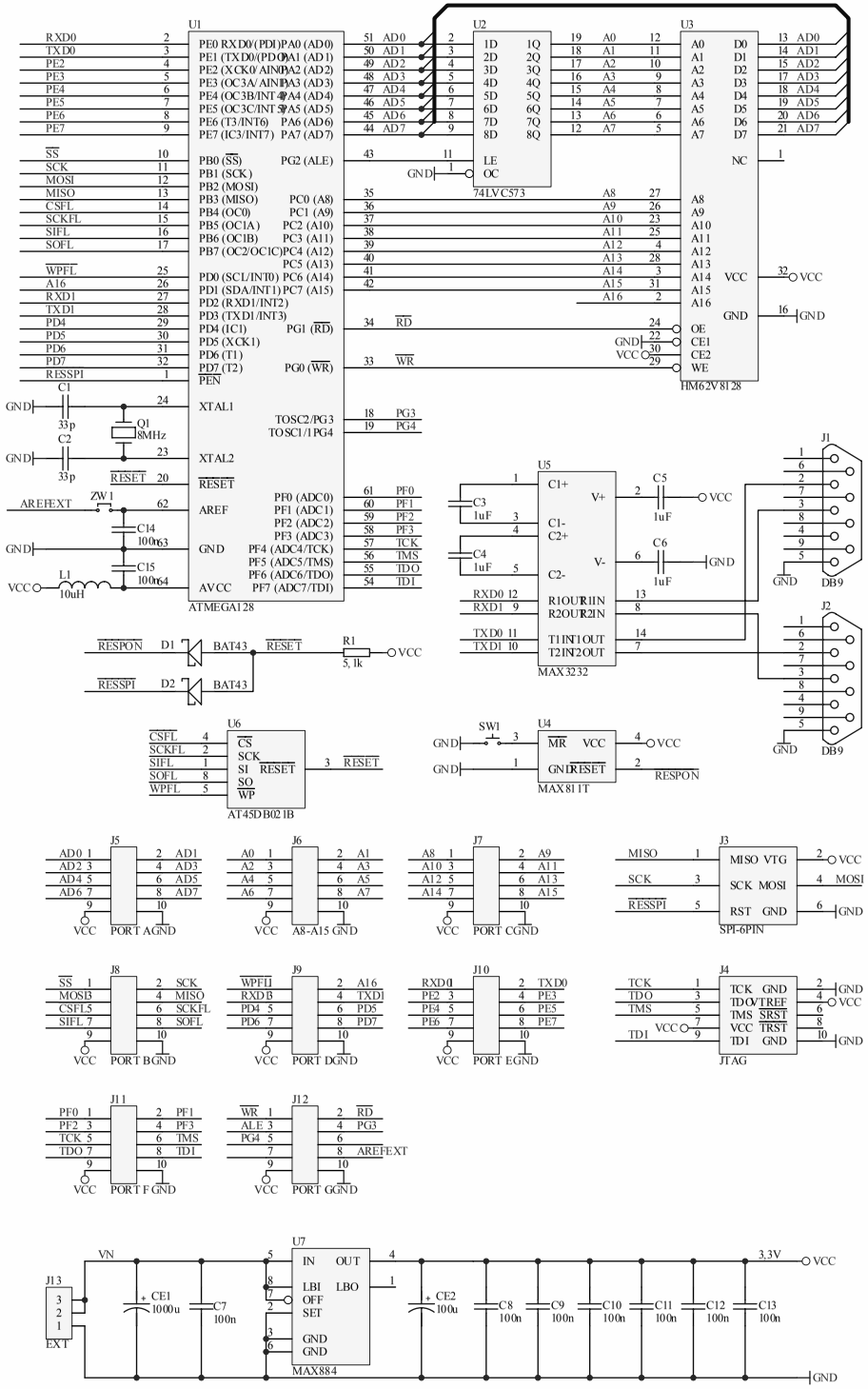
U1
ATMEGA128
U2
74LVC573
U3
HM62V8128
U5
MAX3232
J1
DB9
J2
DB9
U6
AT45DB021B
U4
MAX811T
SW1
R1
5, 1k
VCC
GND
RESPON
RESPI
RESET
D1
D2
BAT43
C1
33p
C2
33p
Q1
8MHz
ZW1
AREFEXT
C14
100n
C15
100n
L1
10uH
C3
1uF
C4
1uF
C5
1uF
C6
1uF
J5
PORT A
J6
A8-A15
J7
PORT C
J3
SPI-6PIN
J8
PORT B
J9
PORT D
J10
PORT E
J4
JTAG
J11
PORT F
J12
PORT G
J13
EXT
U7
MAX884
VN
CE1
1000u
C7
100n
CE2
100u
C8
100n
C9
100n
C10
100n
C11
100n
C12
100n
C13
100n
3,3V