LC²MOS High Speed 4- & 8-Channel 8-Bit ADCs

AD7824/AD7828

FEATURES

4- or 8-Analog Input Channels
Built-In Track/Hold Function
10kHz Signal Handling on Each Channel
Fast Microprocessor Interface
Single +5V Supply
Low Power: 50mW
Fast Conversion Rate, 2.5μs/Channel
Tight Error Specification: 1/2LSB
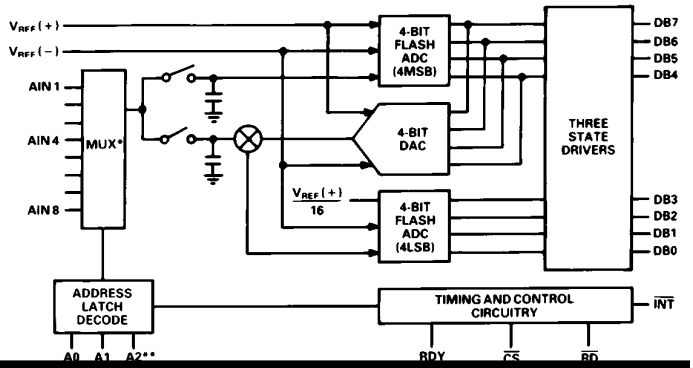
FUNCTIONAL BLOCK DIAGRAM